2 609 932 509.book Seite 1 Dienstag, 29. November 2005 11:31 11

GBM 13-2 RE PROFESSIONAL

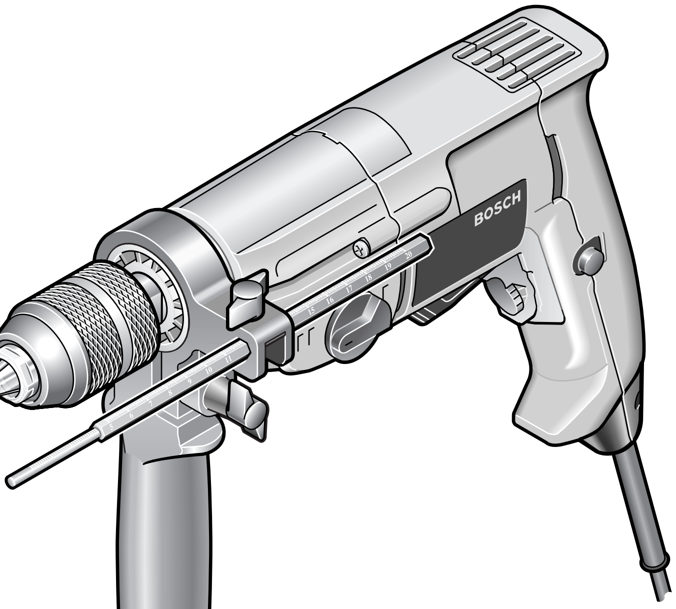

Operating Instructions

操作指南

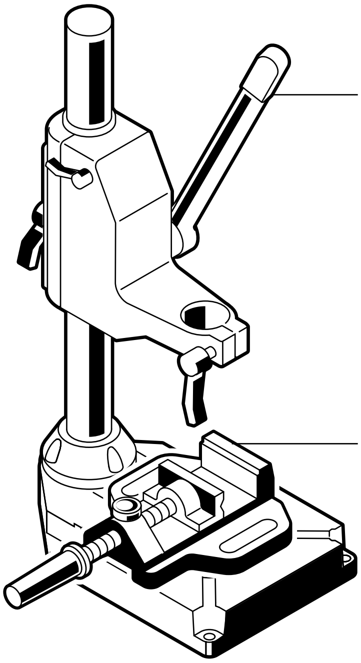

2 608 180 003
(BS 35)
2 608 180 004
(BS 45)

2 608 030 053
(MS 65)
2 608 030 055
(MS 80)

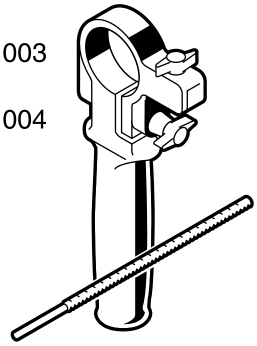

1 612 025 024

1 613 001 005

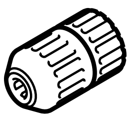

2 608 572 105

1 608 571 062

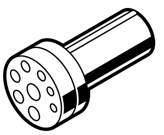

2 607 990 050
(S 41)

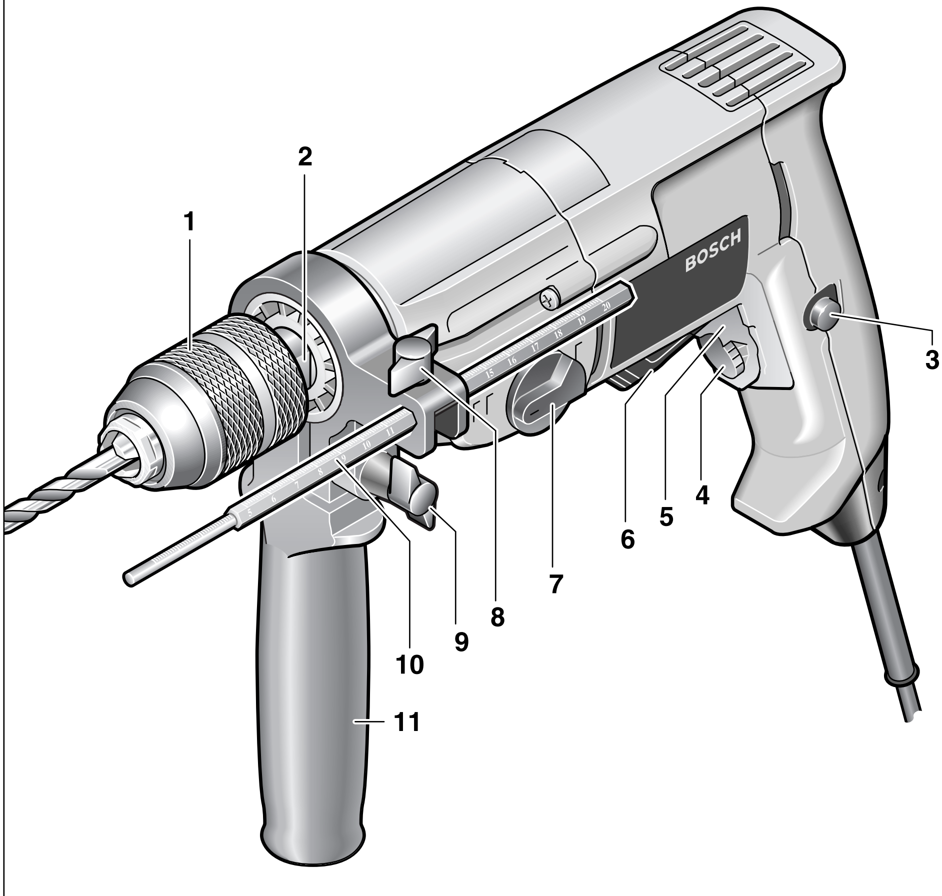

GBM 13-2 RE PROFESSIONAL

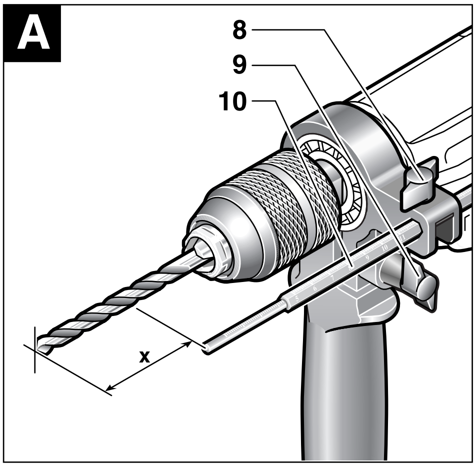
A
8
9
10
x

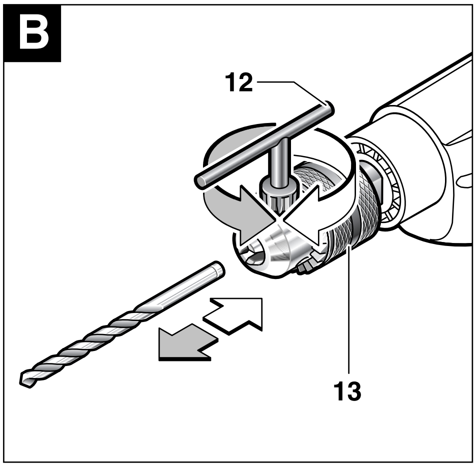
B
12
13

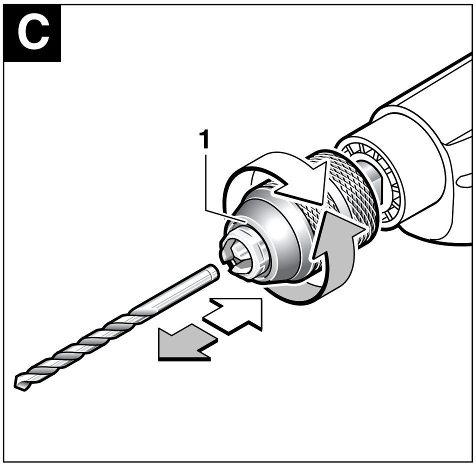
C
1

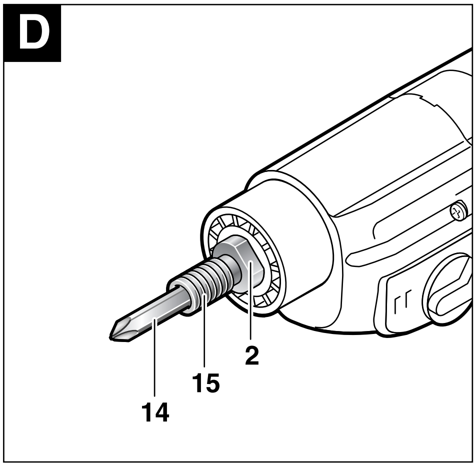
D
2
15
14

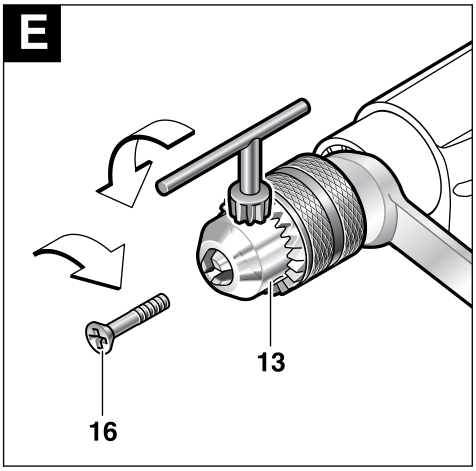
E
13
16

General Power Tool Safety Warnings

⚠WARNING Read all safety warnings and all instructions. Failure to follow the warnings and instructions may result in electric shock, fire and/or serious injury.

Save all warnings and instructions for future reference.

The term "power tool" in the warnings refers to your mains-operated (corded) power tool or battery-operated (cordless) power tool.

1) Work area safety

a) **Keep work area clean and well lit.** Cluttered or dark areas invite accidents.

b) **Do not operate power tools in explosive atmospheres, such as in the presence of flammable liquids, gases, or dust.** Power tools create sparks which may ignite the dust or fumes.

c) **Keep children and bystanders away while operating a power tool.** Distractions can cause you to lose control.

2) Electrical safety

a) **Power tool plugs must match the outlet. Never modify the plug in any way. Do not use any adapter plugs with earthed (grounded) power tools.** Unmodified plugs and matching outlets will reduce the risk of electric shock.

b) **Avoid body contact with earthed or grounded surfaces, such as pipes, radiators, ranges and refrigerators.** There is an increased risk of electric shock if your body is earthed or grounded.

c) **Do not expose power tools to rain or wet conditions.** Water entering a power tool will increase the risk of electric shock.

d) **Do not abuse the cord. Never use the cord for carrying, pulling or unplugging the power tool. Keep cord away from heat, oil, sharp edges or moving parts.** Damaged or entangled cords increase the risk of electric shock.

e) **When operating a power tool outdoors, use an extension cord suitable for outdoor use.** Use of a cord suitable for outdoor use reduces the risk of electric shock.

f) **If operating a power tool in a damp location is unavoidable, use a ground fault circuit interrupter (GFCI) or an earth leakage circuit breaker (ELCB).** Use of a GFCI or an ELCB reduces the risk of electric shock.

3) Personal safety

a) **Stay alert, watch what you are doing and use common sense when operating a power tool. Do not use a power tool while you are tired or under the influence of drugs, alcohol, or medication.** A moment of inattention while operating power tools may result in serious personal injury.

b) **Use personal protective equipment. Always wear eye protection.** Protective equipment such as dusk mask, non-skid safety shoes, hard hat or hearing protection used for appropriate conditions will reduce personal injuries.

c) **Prevent unintentional starting. Ensure the switch is in the off position before connecting to power source and/or battery pack, picking up or carrying the tool.** Carrying power tools with your finger on the switch or energizing power tools that have the switch on invites accidents.

d) **Remove any adjusting key or wrench before turning the power tool on.** A wrench or a key that is left attached to a rotating part of the power tool may result in personal injury.

e) **Do not overreach. Keep proper footing and balance at all times.** This enables better control of the power tool in unexpected situations.

f) **Dress properly. Do not wear loose clothing or jewelry. Keep your hair, clothing, and gloves away from moving parts.** Loose clothes, jewelry, or long hair can be caught in moving parts.

g) **If devices are provided for the connection of dust extraction and collection facilities, ensure these are connected and properly used.** Use of dust collection can reduce dust-related hazards.

4) Power tool use and care

a) **Do not force the power tool. Use the correct power tool for your application.** The correct power tool will do the job better and safer at the rate for which it is designed.

b) **Do not use the power tool if the switch does not turn it on or off.** Any power tool that cannot be controlled with the switch is dangerous and must be repaired.

c) **Disconnect the plug from the power source and/or the battery pack from the power tool before making any adjustments, changing accessories, or storing power tools.** Such preventive safety measures reduce the risk of starting the power tool accidentally.

d) **Store idle power tools out of the reach of children and do not allow persons unfamiliar with the power tool or these instructions to operate the power tool.** Power tools are dangerous in the hands of untrained users.

e) **Maintain power tools. Check for misalignment or binding of moving parts, breakage of parts and any other condition that may affect the power tool's operation. If damaged, have the power tool repaired before use.** Many accidents are caused by poorly maintained power tools.

f) **Keep cutting tools sharp and clean.** Properly maintained cutting tools with sharp cutting edges are less likely to bind and are easier to control.

g) **Use the power tool, accessories, tool bits etc. in accordance with these instructions, taking into account the working conditions and the work to be performed.** Use of the power tool for operations different from those intended could result in a hazardous situation.

5) Battery tool use and care

a) **Recharge only with the charger specified by the manufacturer.** A charger that is suitable for one type of battery pack may create a risk of fire when used with another battery pack.

b) **Use power tools only with specifically designated battery packs.** Use of any other battery packs may create a risk of injury and fire.

c) **When battery pack is not in use, keep it away from other metal objects, like paper clips, coins, keys, nails, screws or other small metal objects, that can make a connection from one terminal to another.** Shorting the battery terminals together may cause burns or a fire.

d) **Under abusive conditions, liquid may be ejected from the battery; avoid contact. If contact accidentally occurs, flush with water. In liquid contacts eyes, additionally seek medical help.** Liquid ejected from the battery may cause irritation or burns.

6) Service

a) **Have your power tool serviced by a qualified repair person using only identical replacement parts.** This will ensure that the safety of the power tool is maintained.

For Your Safety

Read all instructions. Failure to follow all instructions listed below may result in electric shock, fire and/or serious injury.

SAVE THESE INSTRUCTIONS.

- **When working with the power tool, always hold it firmly with both hands and provide for a secure stance.** Both hands guide a power tool more securely.
- **Secure the workpiece.** A workpiece clamped with clamping devices or in a vice is held more secure than by hand.
- **Do not work materials containing asbestos.** Asbestos is considered carcinogenic.
- **Take protective measures when dust can develop during working that is harmful to one's health, combustible or explosive.** Example: Some dusts are regarded as carcinogenic. Wear a dust mask and work with dust/chip extraction when connectable.
- **Keep your workplace clean.** Material mixtures are particularly dangerous. Dust of light metal can be inflammable or explode.
- **Always wait until the tool has come to a complete stop before placing it down.** The tool insert can jam and lead to loss of control over the power tool.
- **Do not use a power tool with a damaged power cord. Do not touch the damaged cord and pull the power plug when the cord is damaged while working.** Damaged cords increase the risk of an electric shock.
- **Connect power tools that are used in the open via a ground fault circuit interrupter.**
- **Always use the auxiliary handles supplied with the machine.** Loss of control can cause personal injury.
- **Use appropriate detectors to determine if utility lines are hidden in the work area or call the local utility company for assistance.** Contact with electric lines can lead to fire and electric shock. Damaging a gas line can lead to explosion. Penetrating a water line causes property damage or may cause an electric shock.

- **Switch off the power tool as soon as the tool insert jams. Be prepared for a high reaction torque, which will cause a kickback.** The tool insert jams when:
  – the power tool is overloaded or
  – it becomes wedged in the workpiece.
- **Hold the power tool only by the insulated gripping surfaces when performing an operation where the cutting tool may contact hidden wiring or its own power cord.** Contact with a "live" wire will also make exposed metal parts of the power tool "live" and shock the operator.

Product Features

The numbering of the product features refers to the representation of the tool on the graphics page.

While reading the operating instructions, unfold the graphics page of the tool and leave it open.

1 Keyless chuck*
2 Flat of nut
3 Lock-on button for On/Off switch
4 Speed preselection thumbwheel
5 On/Off switch
6 Rotational direction switch
7 Gear selector
8 Wing bolt for depth stop adjustment
9 Wing bolt for auxiliary handle adjustment
10 Depth stop
11 Auxiliary handle
12 Chuck key*
13 Key chuck*
14 Drive bit*
15 Drill spindle with hexagon socket
16 Locking screw

* **Not all of the illustrated or described accessories are included as standard delivery.**

Tool Specifications

Drill		**GBM 13-2 RE PROFESSIONAL**
Article number		0 601 169 5..
Rated power input	[W]	550
Output power	[W]	285
No-load speed		
1st gear	[rpm]	0 – 1 000
2nd gear	[rpm]	0 – 1 900
Rated speed		
1st gear	[rpm]	0 – 550
2nd gear	[rpm]	0 – 1 000
Rated torque (1st/2nd gear)	[Nm]	11.5/6.0
Infinitely variable speed control		●
Right/left rotation		●
Chuck clamping range, max.	[mm]	1 – 13
Max. drilling Ø (1st/2nd gear)		
Steel	[mm]	13/8
Wood	[mm]	32/20
Aluminum	[mm]	20/12
Weight according to EPTA-Procedure 01/2003	[kg]	1.9
Safety class		⧈ / II

Please observe the article number on the type plate of your machine. The trade names of the individual machines may vary.

The values given are valid for nominal voltages [U] of 230/240 V. However, these values can vary for lower voltages and models made for specific countries.

Noise/Vibration Information

Measured values determined according to EN 60 745.

The A-weighted sound pressure level of the tool is typically 80 dB (A). Measuring inaccuracy K = 3 dB.
The noise level when working can exceed 85 dB (A).
Wear hearing protection!

The weighted acceleration is typically 3.0 m/s^2.

⚠ WARNING The vibration emission level given in this information sheet has been measured in accordance with a standardized test given in EN 60 745 and may be used to compare one tool with another.
The vibration emission level will vary because of the ways in which a power tool can be used and may increase above the level given in this infor-

mation sheet. This could lead to a significant underestimate of exposure when the tool is used regularly in such a way.
NOTE: To be accurate, an estimation of the level of exposure to vibration experienced during a given period of work should also take into account the times when the tool is switched off and when it is running but not actually doing the job. This may significantly reduce the exposure level over the total working period.

Intended Use

The machine is intended for drilling in wood, metal, ceramic and plastic. Machines with electronic control and right/left rotation are also suitable for screwing and thread cutting.

Auxiliary Handle/Depth Stop (see figure A)

The auxiliary handle can be mounted on the right or left side of the spindle neck with the wing screw **9**.

The drilling depth can be set with the depth stop **10**.

For this, loosen wing bolt for depth stop adjustment **8**, set the required drilling depth **X** and tighten the wing bolt again.

The knurled surface on the depth stop **10** must face upwards.

Inserting the Tool

Key Chuck (see figure B)

Open the chuck until the tool can be inserted. Then, insert the tool.

Using the chuck key **12**, tighten uniformly in all three holes.

Keyless Chuck (see figure C)

Inserting the Tool

Hold the rear sleeve of the keyless chuck **1** tight and open the chuck by turning the front sleeve, until the tool can be inserted.

Tightening the Tool

Hold the rear sleeve tight and firmly tighten the front sleeve by hand, until the locking action (“click”) is no longer heard. The drill chuck is locked automatically.

The locking mechanism loosens when the sleeve is turned in the opposite direction for removing the tool.

Screwdriving Tools (see figure D)

The drill spindle **15** is equipped with a hexagon socket for use with screwdriver bits **14**. The bit can be inserted directly into the drill spindle **15** when the chuck is removed, where it is retained by a securing ring.

Initial Operation

Always use the correct voltage: The voltage of the power source must agree with the values on the nameplate of the tool.

Switching On and Off

To **start** the tool, press the On/Off switch **5** and keep it pressed.

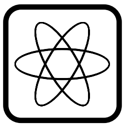

The machine runs with variable speed between 0 and maximum depending on the pressure applied to the On/Off switch **5**. Light pressure results in a low rotational speed, thus allowing smooth, controlled starts. Do not strain the machine so heavily that it comes to a standstill.

Lock the pressed On/Off switch **5** by pressing the lock-on button **3**.

To **switch** the tool **off**, release the On/Off switch **5** or press and then release it.

Changing the Rotational Direction

Operate the rotational direction switch 6 only at a standstill.

Set the rotational direction switch **6** to **R** (right-hand rotation) or **L** (left-hand rotation). (When the On/Off switch **5** is actuated, the rotational direction switch **6** is locked.)

The left-hand rotation enables screws or nuts to be unscrewed.

Mechanical Gear Selection

Two speed ranges can be preselected with the gear selector **7**:

Gear I:	Lower r.p.m. range
Gear II:	Higher r.p.m. range

The speed can be switched during drilling operation. However, this should not be done while operating at full load.

Speed Preselection

With the thumbwheel **4**, the required speed can be selected even if the machine is running.

Replacing the Chuck (see figure E)

- Before any work on the tool itself, pull the power plug.

Removing the Locking Screw

The locking screw **16** secures the drill chuck against loosening from the drill spindle. Fully open the drill chuck and completely unscrew the locking screw **16** by turning it clockwise.

If the locking screw is seated tight, apply screwdriver to the head of the screw and loosen it by giving the screwdriver handle a sharp blow.

Unscrewing the Chuck

Key Chuck

To unscrew key chuck **13**, position an open-end wrench (size 17 mm) against the wrench flats.

Place the chuck key in one of the 3 holes and loosen the chuck by turning it to the left using the key as a lever. If the key chuck is frozen in place, a light blow on the chuck key should loosen it.

Keyless Chuck

Insert hexagon tool (Allen key or screwdriver bit) into the chuck and clamp the free end in a vise. Position open-end wrench against the wrench flats of the drill spindle and loosen chuck in a counterclockwise direction, as if loosening a screw.

The keyless chuck is mounted in reverse order.

⚠ **The chuck must be tightened with a tightening torque of approx. 15 Nm.**

Operating Instructions

- **Apply the power tool to the screw/nut only when it is switched off.**

The required speed depends on the material and can be determined with practical trials.

After working with the machine for long periods at low speed, allow it to cool by letting it run for approx. 3 minutes at maximum speed with no load.

Sharpening Drill Bits

When drilling in metal, use only perfectly sharpened HSS (high-speed steel) drill bits. The appropriate quality is guaranteed by the Bosch accessories program.

Twist drills from 2.5 – 10 mm can easily be sharpened with the drill sharpener (see accessories).

Bench Stand

We recommend the use of a bench stand (see accessories) especially when work demanding more precision is required.

Machine Vise

The machine vise (available as an accessory) facilitates a safe tightening of workpieces, preventing their twisting and any accidents this would cause.

Maintenance and Cleaning

- Before any work on the tool itself, pull the power plug.
- For safe and proper working, always keep the machine and the ventilation slots clean.

If the power tool should fail despite the care taken in manufacturing and testing procedures, repair should be carried out by an after-sales service center for Bosch power tools.

In all correspondence and spare parts orders, please always include the 10-digit article number given on the nameplate of the power tool.

Disposal

Power tools, accessories and packaging should be sorted for environmental-friendly recycling.

Service

Exploded views and information on spare parts can be found under:
www.bosch-pt.com

In case of a claim, repair or purchase of replacement parts or in case of queries or other problems, please contact your local dealer or Bosch representative.

People's Republic of China

Website: www.bosch-pt.com.cn

China Mainland
Bosch Power Tools (China) Co., Ltd.
567, Bin Kang Road
Bin Jiang District 310052
Hangzhou, P.R.China

Service Hotline: 800 8 20 84 84
✆ .... +86 571 87 77 43 38
Fax .... +86 571 87 77 45 02

HK and Macau Special Administrative Regions
Room 1210, Shun Tak Centre, West-Tower,
168 – 200 Connaught Road, Central Hong Kong

Customer Service Hotline: .... +852 25 89 15 61
Fax .... +852 25 48 79 14

E-Mail: bosch@melchers.com.hk

Subject to change

针对电动工具的一般性警告提示

⚠ 警告 **阅读所有的警告提示和指示。** 如未确实遵循警告提示和指示，可能导致电击、火灾并且／或其他的严重伤害。

妥善保存所有的警告提示和指示，以便日后查阅。

在警告提示和指示中使用的 " 电动工具 " 是指必须连接电源的电动工具（配备电线）和使用蓄电池的电动工具（无电线）。

1) 工作场所的安全规章

a) **工作场所必须保持乾净并且照明要充足。** 杂乱或昏暗的工作场所容易导致意外。

b) **不可在有爆炸危险的环境下操作本电动工具。有爆炸危险的环境是指充斥了易燃液体、瓦斯或尘埃的工作场所。** 操作机器时会产生火花，火花容易引燃尘埃或易燃蒸汽。

c) **操作机器时不可让儿童或旁观者靠近工作场所。** 工作时如果因为第三者的干扰而分散注意力可能导致操作失控。

2) 使用电器用品的安全指示

a) **使用的插座必须能够配合电动工具的插头。切勿擅自更改插头。转接插头不可以和接了地线的电动工具一起使用。** 使用机器出厂时的原装插头和合适的插座可以降低遭受电击的危险。

b) **避免让身体碰触接地的物体，例如水管、散热器、电炉和冰箱等。** 如果您的身体接地了，非常容易遭受电击。

c) **机器必须远离雨水或湿气。** 如果让水渗入电动工具中，会提高操作者遭受电击的危险。

d) **正确地处理电线。不可以使用电线提携电动工具、悬挂电动工具或者以抽拉电线的方式拔出插头。电线必须远离高温、油垢、锋利的边缘或转动中的机件。** 电线如果受损或缠绕在一起，会提高操作者遭受电击的危险。

e) **如果在户外使用电动工具，只能使用合适的户外专用延长线。** 使用合格的户外专用延长线，可降低操作者遭受电击的危险。

f) **如果无法避免的，必须在潮湿的环境中使用本电动工具，得使用剩馀电流保护开关。** 使用剩馀电流保护开关可以预防遭受电击。

3) 针对操作者的安全指示

a) **工作时务必要全神贯注，不但要保持头脑清醒更要理性地操作电动工具。疲惫、喝酒或服用毒品、兴奋剂、药物之后，切勿操作电动工具。** 使用电动工具时只要稍微分心便可能发生后果严重的意外。

b) **穿好您个人的防护装备并戴上护目镜。** 根据所使用的电动工具穿戴合适的防护装备，例如防尘面罩、止滑工作鞋、安全帽或耳罩，可降低工作伤害的发生机率。

c) **避免意外启动机器。插上插头并且／或安装蓄电池之前，提起或搬运机器之前，务必先检查电动工具是否处在关闭状况。** 如果您在提携电动工具时，手指碰触了开关，或著在连接电源时，起停开关仍然设定在开动位置，都可能造成极严重的意外。

d) **开动电动工具之前必须拆除仍然插在机器上的调整工具／或螺丝扳手。** 如果机器已经开始转动 , 而机器上仍然插著调整工具，很容易伤害使用者。

e) **避免错误的持机姿势。操作机器时要确保立足稳固，并要随时保持平衡。** 正确的操作姿势能够帮助您在突发状况下及时控制住电动工具。

f) **穿著合适的工作服。工作时不可以穿太宽松的衣服，也不可以戴首饰。不可以让头发、衣服和手套接触机器上的转动机件。** 宽松的衣物、长发或首饰容易被卷入转动的机件中。

g) **如果能够在机器上安装吸尘装置、集尘装备，务必按照指示安装此类辅助工具，并且正确地操作该装置。** 使用吸尘装备可以防止工作尘危害人体。

4) 小心地使用和处理电动工具

a) **勿让机器承载过重的负荷。根据工作性质选择适合的电动工具。** 正确地选用电动工具可以在规定的功率范围中，更有效率更安全的操作机器。

b) **勿使用开关故障的电动工具。** 如果无法正常操控起停开关，极容易在操作机器时产生意外。尽快将故障的机器送修。

c) **在调整机器设定、更换零件或不使用机器时，都必须先从插座上拔出插头并且／或取出蓄电池。** 这个预防措施可以避免不小心开动电动工具。

d) **不使用电动工具时，必须把机器存放在儿童无法取得之处。勿让不熟悉机器操作方法及未阅读本说明书的人使用本机器。**让经验不足的人操作电动工具容易发生意外。

e) **细心地保养、维护电动工具。检查机器上的转动零件是否运作正常，并确定是否有零件断裂或损坏。故障的机件会影响电动工具的运作功能。使用机器之前务必先更换或修理故障的机件。** 若未彻底执行机器的维护工作容易导致工作意外。

f) **切割工具必须保持锋利、清洁。** 经过细心保养而且刀刃锋利的切割工具不易被夹住，而且较容易操作。

g) **遵照这些指示使用电动工具、配件及安装在机器上的工具。另外也必须注意有关机器操作方式及机器适用范围的解说。** 如果使用电动工具执行不符合该机器性能的工作，极容易发生意外。

5) 小心地使用和处理充电式机器

a) **只能使用制造商推荐的充电器为蓄电池充电。** 不可以使用针对某些特定蓄电池的充电器，为其他的蓄电池充电，可能引起火灾。

b) **务必使用电动工具的专用蓄电池。** 使用了不合适的蓄电池可能发生工作意外Κ引起火灾。

c) **不使用的蓄电池必须远离回形针、硬币、钥匙、钉子、螺丝或其他的金属物体。上述物体可能连接蓄电池上的触点引起短路。** 蓄电池的两个触点如果发生短路，可能引起火灾。

d) **如果使用不当可能从蓄电池渗出液体。避免接触此类流动物体。如果不小心触摸了，马上用水冲洗。如果上述液体侵入眼睛必须即刻就医。** 从蓄电池流出的液体会刺激或灼伤皮肤。

6) 检修服务

a) **只能将电动工具交给合格的专业人员检修。检修时只能换装原厂零、配件。** 唯有如此才能确保机器的安全性能。

针对您的工作安全

必须阅读所有说明。 未确实遵守以下各指示，容易遭受电击，引起火灾或造成严重伤害。

请妥善保存本使用指南。

- **工作时必须以双手握紧电动工具，并且要确保立足稳固。** 使用双手操作电动工具比较稳定、安全。
- **固定好工件。** 使用固定装置或老虎钳能够更安全、稳固地夹牢工件。
- **勿加工含石棉的物料。** 石棉是致癌物质。
- **如果操作机器时会产生有害健康、易燃或可能引爆的废尘，务必采取适当的防护措施**。例如针对某些可能导致癌症的尘埃，务必戴上防尘面具，如果能够在机器上安装吸尘器，也要加装此机件。
- **工作场所要保持整洁。** 物料经过混合后，可能具有相当高的危险性。轻金属尘容易燃烧或爆炸。
- **必须等待电动工具完全静止后，才可以放下机器。** 安装在机器上的工具可能被堵住，进而无法控制电动工具。
- **勿使用电线受损的机器。如果电源电线在工作中损坏了或断裂了，千万不可触摸电线，必须马上拔出插头。** 使用损坏的电线容易触电。
- **在户外使用机器时必须安装剩馀电流（FI）防护开关。**
- **务必使用包含在电动工具供货范围中的辅助把手。** 工作时如果无法正确控制机器可能被割伤。
- **以合适之探测器侦查作业范围中是否有隐埋之线路、管道，必要时须向当地的建设单位请求支援**。
  工作时如果凿穿了电缆线会导致火灾并遭受电击。损坏了瓦斯管会引起爆炸。割断了水管不仅会造成财物损失，操作机器者也可能因此触电。
- **如果安装在机器上的工具被堵住了，必须马上关闭电动工具 。必须随时防范，因为机器反冲而产生的强大反应扭力。** 安装在机器上的工具会被堵住。例如:
  – 电动工具处在超荷状态或者
  – 工具在工件中歪斜了。
- **工作时，如果安装在机器上的刀具可能锯断隐藏的电线，或机器本身的电源线，那麽一定要握著绝缘手柄操作电动工具。** 电动工具如果接触了带电的电线，机器上的金属部件会导电并令操作者触电。

机件

机件的编号和机器详解图上的编号一致。

阅读使用说明书时，请翻开印有机件解说图的折叠页，以便随时查阅。

1 快速夹头 *

2 扳手安插位置

3 起停开关锁

4 转速调整轮

5 起停开关

6 正逆转开关

7 选档开关

8 调整深度尺之蝶形螺杆

9 调整辅助把手之蝶形螺杆

10 深度尺

11 辅助把手

12 夹头扳手 *

13 齿环夹头 *

14 螺丝批嘴 *

15 内六角钻轴

16 固定螺丝

* **一般情况下交付的货品，不一定附有图示或说文中提及的附件。**

机器规格

电钻		**GBM 13-2 RE PROFESSIONAL**
物品代码		0 601 169 5..
输入功率	[瓦]	550
输出功率	[瓦]	285
无负载转速		
第一档	[次 / 分]	0 – 1 000
第二档	[次 / 分]	0 – 1 900
额定转速		
第一档	[次 / 分]	0 – 550
第二档	[次 / 分]	0 – 1 000
额定扭力 (第 1/ 第 2 档)	[牛顿米]	11,5/6,0
无段式地调整转速		●
正转 / 逆转功能		●
夹头之缩放范围，最大	[毫米]	1 – 13
最大钻孔直径 (第 1/ 第 2 档)		
钢	[毫米]	13/8
木材	[毫米]	32/20
铝	[毫米]	20/12
重量符合欧洲议会技术评定联盟 (EPTA) 2003 年 1 月议程中提出的规定	[千克]	1,9
绝缘等级		▣ / II

务必认清电动工具铭牌上的物品代码，同一机器可能具备不同的物品名称。

本资料乃针对 230/240 (V) 伏特的标称电压，不适用於低电压地区，以及有特殊用电规定的国家。

噪音及振动资料

本值乃根据 EN 60 745 的规定所测得。

本机器的音压 A 值通常是 80 dB (A)。测量误差 K = 3 dB。
工作时噪音值可能超过 85 dB (A)。
请戴上护耳罩！

加速度值为 3,0 m/s^2。

⚠ 警告 本说明书中提供的振荡水平，是根据 EN 60 745 规定的测量过程所测得。
本测量值可作为和其它机器比较的标准。
本振荡水平会随著电动工具的应用领域而改变。
在某些情况下，机器的振荡水平会超越本说明书中提供的振荡值。如果经常在上述状况下使用电动工具，可能会低估了机器的振荡负载。

提示：如果要准确地评估电动工具在特定时间内的振荡负载水平，还必须顾及关机的时间和机器空转待命的时间。上述的时间会明显降低机器在总测量时间内的振荡负载程度。

正确地使用机器

本机器适合在塑胶、陶器、金属及木材上进行钻孔作业。配备了电动调节装置及正／逆转功能的机器，也能旋转螺旋及钻制螺纹。

辅助把手／深度尺（参考插图 A）

可利用蝶形螺杆 **9**，将辅助把手安装在心轴颈之右侧或左侧。

使用深度尺 **10** 可设定钻孔深度。

松开调整深度尺之蝶形螺杆 **8**，设定好所需之钻孔深度 **X**，再度收紧蝶形螺杆。

深度尺 **10** 上之肋纹必须朝上。

安装工具

齿环夹头（参考插图 B）

打开夹头至可以插入钻头（工具）为止。安装好工具。

以夹头扳手 **12** 插入夹头上之三个孔中，并均匀地收紧。

快速夹头（参考插图 C）

安装工具

握紧快速夹头 **1** 上之后套筒，接著再以旋转之动作来打开前套筒。必须将其打开至可以插入钻头为止。

夹紧配件

先握紧后套筒，然后以手用力地转紧前套筒至不再听到卡入声响（"克力克"）为止。此时夹头已经自动锁定。

将套筒朝著相反方向转动便可取出钻头，在转动的同时锁定功能会自动解除。

螺丝起子头（参考插图 D）

钻轴 **15** 上可以安装螺丝批嘴 **14**。拆下夹头之后，可以直接把螺丝批嘴安装在钻轴 **15** 上，此时固定环会支撑好批嘴。

机器之操作

请使用正确的电压：电源的电压必须与机器型牌上所提供的规格一致。

开动／关闭

开动机器，先按下起停开关 **5** 并保持按住状态。

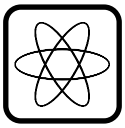

操作者在起停开关 **5** 上的施力大小，可改变转速。改变范围在 0 至最大转速间。施力小，转速低，起钻缓稳容易控制。勿让机器因承受过大的负荷而停止运转。

固定起停开关 **5**，可使用起停开关锁 **3** 锁定被按住之起停开关。

关闭机器，放开起停开关 **5** 或按下起停开关并随即将其放开。

变换转向

当机器处於静止状态时才可操作正逆转开关 6。

正逆转开关 **6** 可设定为 **R**（正转）或 **L**（逆转）。（如果起动了起停开关 **5**，正逆转开关 **6** 便会被锁定）。

将机器调整在逆转位置，可转松螺丝或螺母。

手动换档

利用选档开关 **7** 可进行两段转速之变换：

第一档：　低转速范围

第二档：　高转速范围

在机器运转中也可以换档。但是在机器过载时则勿换档。

调选转速

使用调整轮 **4** 可设定需要之转速（在机器运转中也可进行调整）。

更换夹头（参考插图 E）

- 对机器作任何换修工作之前，一定要先拔出插头。

拆除固定螺丝

固定螺丝 **16** 把夹头固定在钻轴上，以防止夹头脱离。把夹头完全打开，顺著时针的转向转出螺丝 **16**。

如果固定螺丝卡住了，可以把螺丝起子放在螺丝头上，并轻敲螺丝起子柄即可以松开螺丝。

转出夹头

齿环夹头

欲转出齿环夹头，先以开口扳手 (SW 17) 将齿环夹头 **13** 固定。

把夹头扳手插入夹头上之任何一个孔中 （夹头上共有 3 个孔），并如同旋转螺丝一般，左转松开夹头。如果齿环夹头卡住无法转松，可轻敲扳手以松开夹头。

快速夹头

把六角工具 （六角扳手或螺丝起子头）插入夹头中，并以虎钳固定工具之另一端。将开口扳手插放在心轴上之扳手插放处，并如同转松螺丝一般，向左转动以卸下夹头。

安装夹头则以逆步骤进行。

⚠ **必须以 15 牛顿米之扭力旋紧夹头。**

操作指示

- **先关闭电动工具，然后再把工具放置在螺丝／螺母上。**

理想之转速会因材料不同而改变，唯有实际操作才能得知结果。

机器在长期以低转速运作之后，可让其在空载状况下，以最高转速转动约 3 分钟，来进行冷却。

研磨钻头

钻金属必须使用完好，研磨过 的 HSS 钻头 （HSS = 高功能快速切割钢）。 Bosch 配件系列中有符合此品质的钻头。

使用钻头研磨器 （参考配件），可轻易地补磨 2,5–10 毫米之螺旋形钻头。

钻床架

进行精确之钻孔作业时，请使用钻床架 （参考配件）。

老虎钳

老虎钳属於本公司之配件系列产品，可用来夹紧加工材料，预防材料在作业中途滑动因而导致意外。

维护与清洁

- 对机器作任何换修工作之前，一定要先拔出插头。
- 经常保持机器与通气孔之清洁，以便利工作进行并确保工作安全。

虽然本公司所生产的机器都经过严密的品质检查，但如仍有缺障，可将机器送交 Bosch 电动工具公司授权的顾客服务处修理。

在查询和订购附件时，务必告知标示在机器铭牌上的 10 位数物品代码。

废物处理

为了响应环保，电动工具、附件和包装材料必须详细分类，以便利资源回收。

服务

您可以从以下的网址查阅机器的分解图和备件的详细资料:
www.bosch-pt.com

有关保证，维修或更换零件事宜，请向合格的经销商查询。

中华人民共和国

网址： www.bosch-pt.com.cn

中国大陆
博世电动工具 （中国）有限公司
中国，浙江省，杭州市
滨江区，滨康路 567 号
邮编 310052

客户服务热线: 800 8 20 84 84
电话 : .... +86 571 87 77 43 38
传真: .... +86 571 87 77 45 02

香港和澳门特别行政区
香港上环干诺道中 168–200 号
德中心西座 1210 室

客户服务热线 : .... +852 25 89 15 61
传真: .... +852 25 48 79 14

电邮: bosch@melchers.com.hk

保留更改权

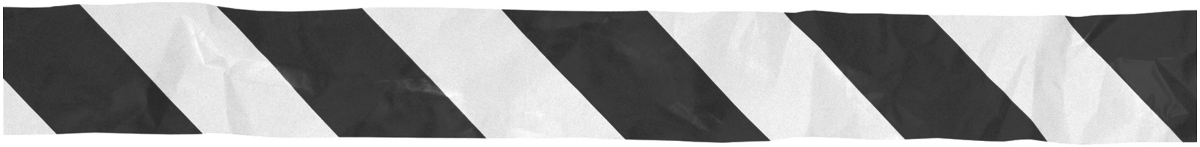

Robert Bosch GmbH
Power Tools Division
70745 Leinfelden-Echterdingen
www.bosch-pt.com

2 609 932 509 (05.12) O / 16